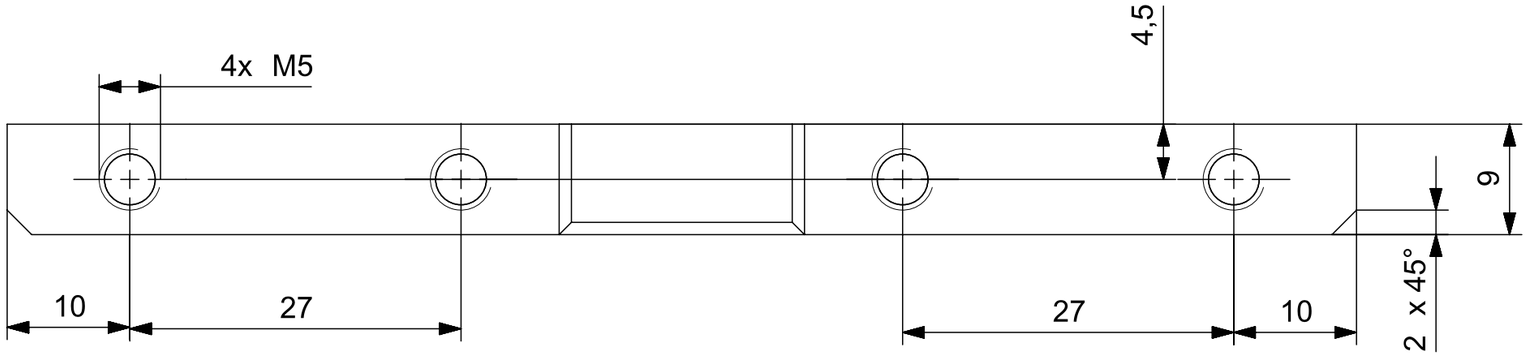

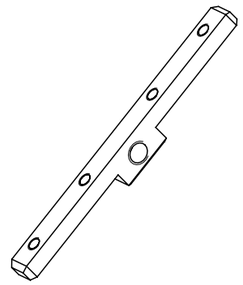

3D VIEW
SCALE 1:2

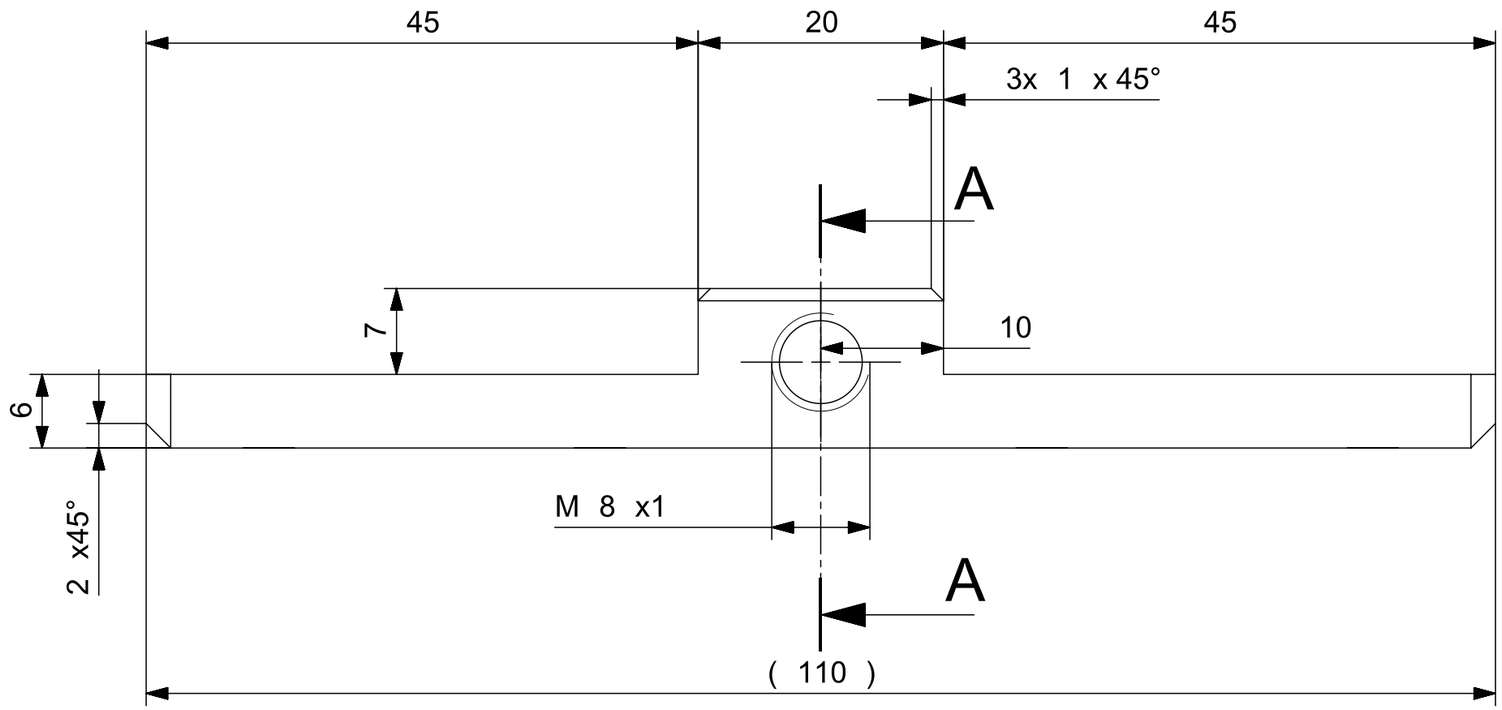

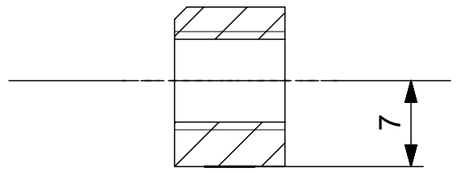

SECTION A-A

CAD 1	Datum / Date	Jmeno / Name		
Kreslil / Drawn by	11. 6. 2020	Schneider Filip		
Prezkousel / Checked by	---	---		
Schvalil / Approved by	---	---		
Index zmeny	Popis zmeny / change description	Schval. / APP	Datum / Date	Podpis / Signature
---	---	---	---	---
---	---	---	---	---

FAKULTA STROJNI
ZAPADOCESKE
UNIVERZITY
V PLZNI

Vsechna prava vyhrazena / All rights reserved

Poznamka / Note:

Polotovar 4HR 15 - 120

Tolerance / Tolerovani
ISO 128
ISO 8015
ISO 2768mK

Soubor-model / ASM-file: tlacna_deska

Soubor-vykres / DRW-file: tlacna_deska

Projekt / Project: 20_BP_FS

Material: Ocel S235JR

C.hmotnost [g]: 17,60

Meritko / Scale: 1:1

Nazev / Title: Tlačná deska

Rev.: 0

Cislo vykresu / Drawing No.: 20_BP_FS_02

List / sheet no. 1 Pocet listu / sheets 1

Format: A3