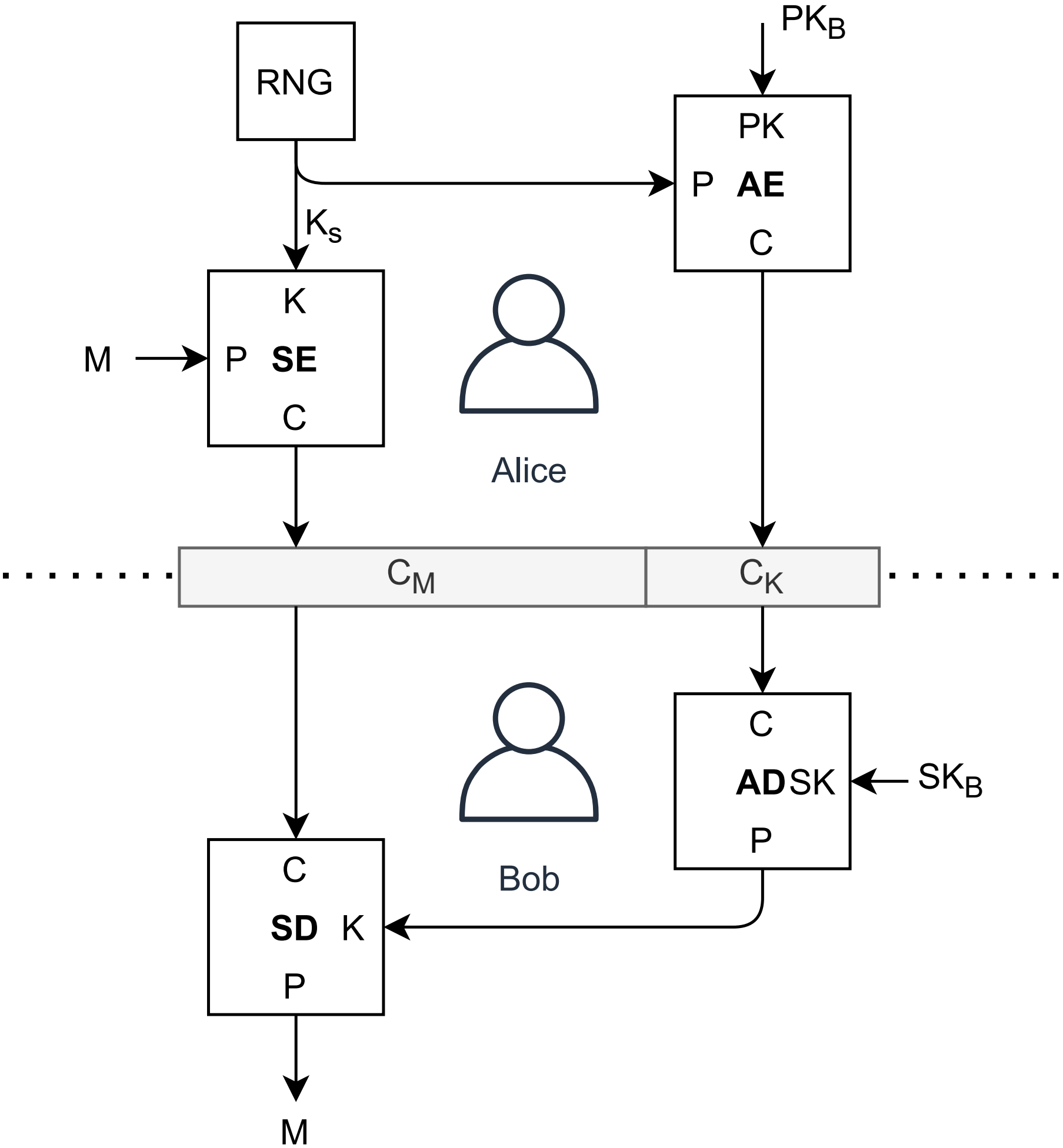
RNG
PK_B
PK
P AE
C
K_s
K
M
P SE
C
Alice
C_M
C_K
C
AD SK
P
SK_B
Bob
C
SD K
P
M